Screw-in RTD temperature probes (TM1105)

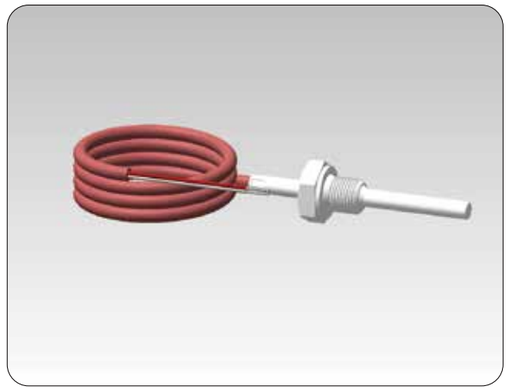

▶Applications:

The screw-in RTD temperature probes are used to measure the temperature of gases or liquids, including HVAC, Refrigeration equipments, Heaters, Ovens, Plants, Mechanical equipments and Experimental facilities,etc.

▶Technical data:

Connecting cable: PVC, temperature range: -5℃~+85℃
Silicone, temperature range: -50℃~+180℃
Teflon, temperature range -50℃~+260℃
Glass Fiber, temperature range: -50℃~+350℃

Protection tube: Stainless steel 304/316, OD=4mm,5mm, 6mm,8mm, 9mm,11mm

Sensor element: Pt100, Pt500, Pt1000 meets IEC 751

Tolerance: Class B: △t=±(0.30 + 0.005 |t|)℃
Class A: △t=±(0.15 + 0.002 |t|)℃

Response time: $t_{0.9}$ approx. 4secs, in water 0.2 m/sec, diameter 4mm

▶Wiring diagram:

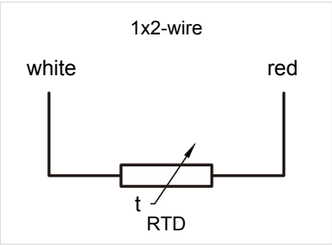

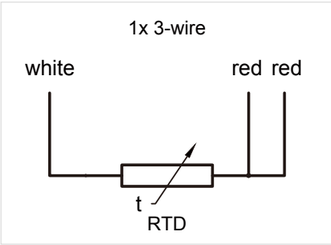

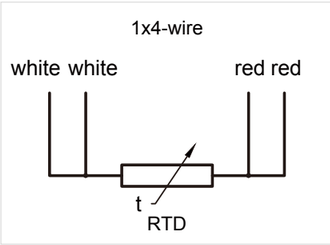

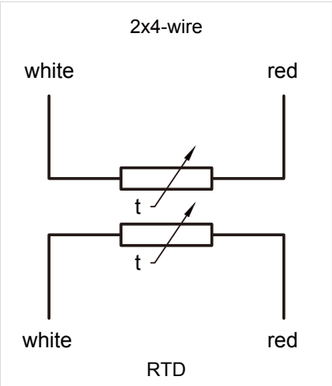

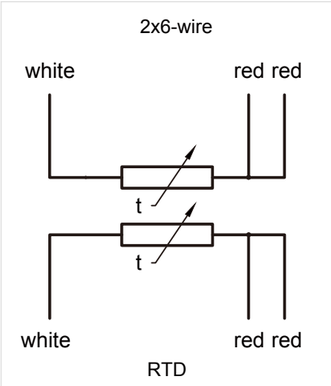

BOCON®
Stock Code:430519

▶Dimensions:

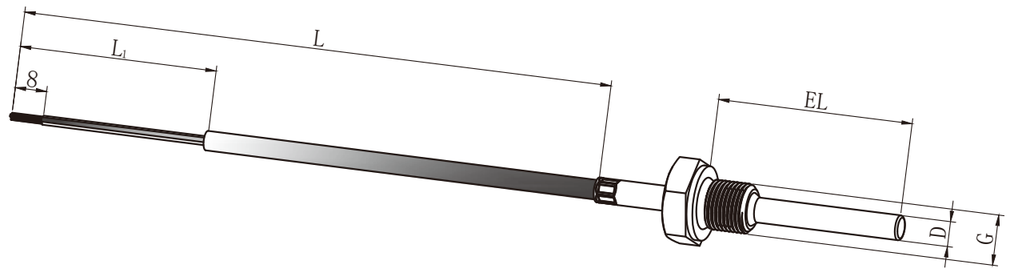

▶Order Details:

TM1105 — (1) — (2) — (3) — (4) — (5) — (6) / (7)

(1)Protection tube diameter D

4	4mm	5	5mm
6	6mm	8	8mm
9	9mm	11	11mm

(2) Insertion Length EL

50	50mm
200	200mm
500	500mm

Note: other lengths as per customers' requirements(50mm≤EL≤500mm)

(3)Process connection G

118	M12×1	119	M12×1.5
120	M14×1	121	M14×1.5
122	M16×1	123	M16×1.5
211	G1/4"	213	G1/2"

Details in "Thread code table"

(4)Sensor element

11	1 x Pt100 in 2-wire circuit
51	1 x Pt500 in 2-wire circuit
61	1 x Pt1000 in 2-wire circuit
13	1 x Pt100 in 3-wire circuit
14	1 x Pt100 in 4-wire circuit
12	2 x Pt100 in 4-wire circuit
16	2 x Pt100 in 6-wire circuit

(5)Measuring range/Connecting cable

10	-5℃ ~ +85℃ /PVC
13	-50℃ ~+ 180℃/Silicone
14	-50℃ ~ +260℃/Teflon
15	-50℃ ~ +350℃/Glass Fiber

(6) Cable length L(L≥100mm)

100	100mm
200	200mm
2000	2000mm

Note: other lengths as per customers' requirements (100mm≤L<1000mm, L_1=50mm, L≥1000mm, L_1=100mm)

(7)Additional options

00	No
01	Strain relief spring/strain relief spring hose
02	Shielded connecting cable (D≥4mm)
03	Waterproof function
07	Ferrules as per DIN 46 228 part4 (Standard)
08	Multipole connector (Providing types)
99	Special options

List the additional options in sequence, separated by commas.