Push-in RTD temperature probes (TM1101)

▶Applications:

The Push-in RTD temperature probes are used to measure the temperature of gases or liquids, including HVAC, Refrigeration equipments, Heaters, Ovens, Mechanical equipments and Experimental facilities, etc.

▶Technical data:

Connecting cable: PVC, temperature range: -5℃~+85℃
Silicone, temperature range: -50℃~+180℃
Teflon, temperature range -50℃~+260℃
Glass Fiber, temperature range: -50℃~+350℃

Protection tube: Stainless steel 304/316, OD=4mm,5mm, 5.2mm,6mm

Sensor element: Pt100, Pt500, Pt1000 meets IEC 751

Tolerance: Class B: △t=±(0.30 + 0.005 |t|)℃
Class A: △t=±(0.15 + 0.002 |t|)℃

Response time: $t_{0.9}$ approx. 10secs, in water 0.2 m/sec, diameter 6mm

▶Wiring diagram:

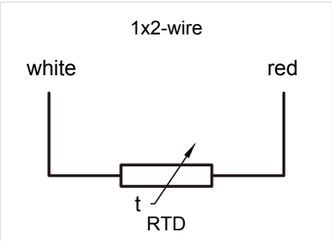

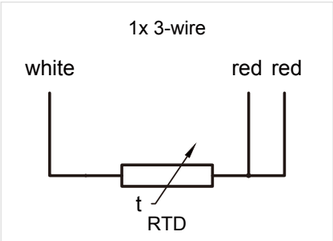

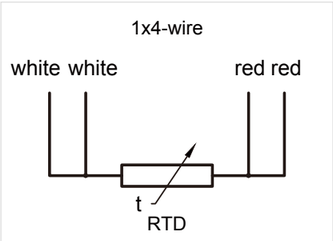

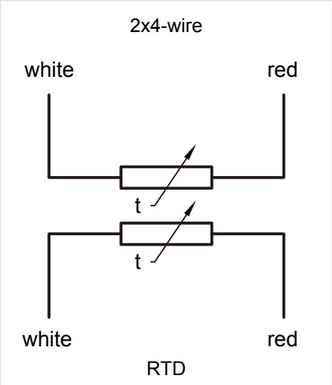

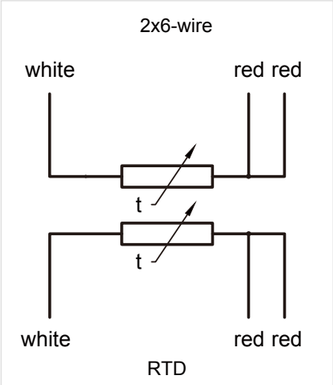

BOCON®
Stock Code:430519

▶Dimensions:

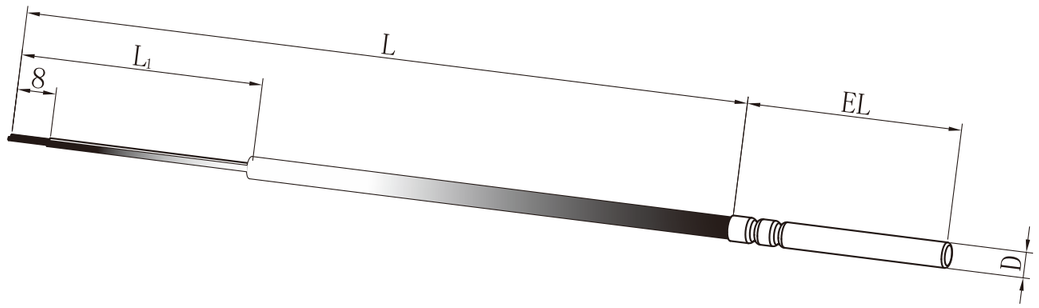

▶Order Details:

TM1101	—	(1)	—	(2)	—	000	—	(4)	—	(5)	—	(6)	/	(7)

(1)Protection tube diameter D

4	4mm
5	5mm
5.2	5.2mm (EL≤45mm)
6	6mm

(2) Insertion length EL

30	30mm
45	45mm
50	50mm

Note: other lengths as per customers' requirements

(4) Sensor element

11	1 x Pt100 in 2-wire circuit
51	1 x Pt500 in 2-wire circuit
61	1 x Pt1000 in 2-wire circuit
13	1 x Pt100 in 3-wire circuit
14	1 x Pt100 in 4-wire circuit
12	2 x Pt100 in 4-wire circuit
16	2 x Pt100 in 6-wire circuit
62	2 x Pt1000 in 4-wire circuit

(5) Measuring range/connecting cable

10	-5℃ ～ +85℃ /PVC
13	-50℃ ～ +180℃/Silicone
14	-50℃ ～ +260℃/Teflon
15	-50℃ ～ +350℃/Glass Fiber

(6) Cable length L(L≥100mm)

100	100mm
200	200mm
2000	2000mm

Note: other lengths as per customers' requirements (100mm≤L<1000mm ,L_1=50mm; L≥1000mm, L_1=100mm)

(7) Additional options

00	No
01	Strain relief spring/ strain relief spring hose
02	Shielded connecting cable (D≥4mm)
03	Waterproof function
07	Ferrules as per DIN 46 228 part4 (Standard)
08	Multipole connector (Providing types)
99	Special options

List the additional options in sequence, separated by commas.